GENERAL ELECTRIC

40D420759 — 2 — 1

UNLESS OTHERWISE SPECIFIED USE THE FOLLOWING —
APPLIED PRACTICES | SURFACES ✓ | TOLERANCES ON FRACTIONS | DECIMALS | ANGLES

40D420759 — SHT 2 OF SHEET 2 — 1

TITLE OUTLINE ~ CAR BOTTOM FURNACE - GAS FIRED
FIRST MADE FOR 40X607252-G1 S.O. 810

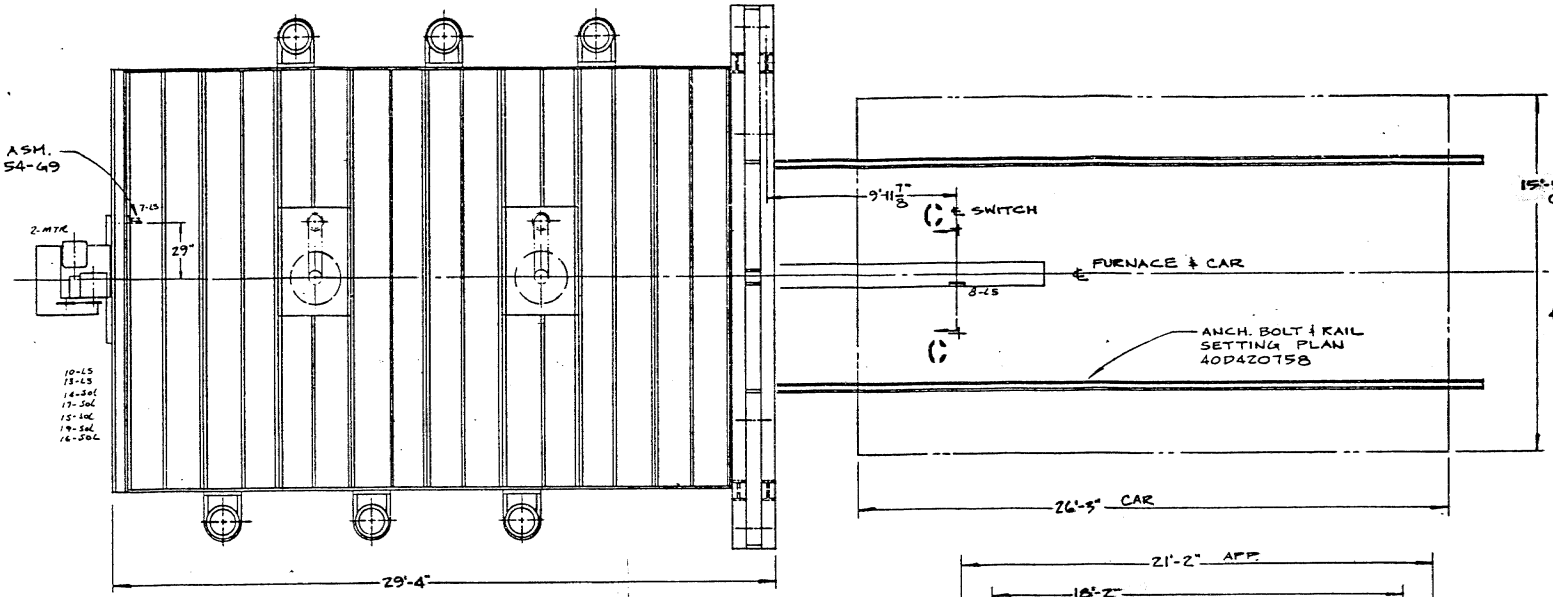

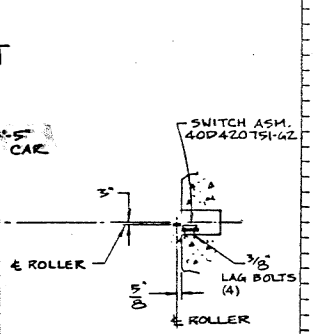

SECTION C-C

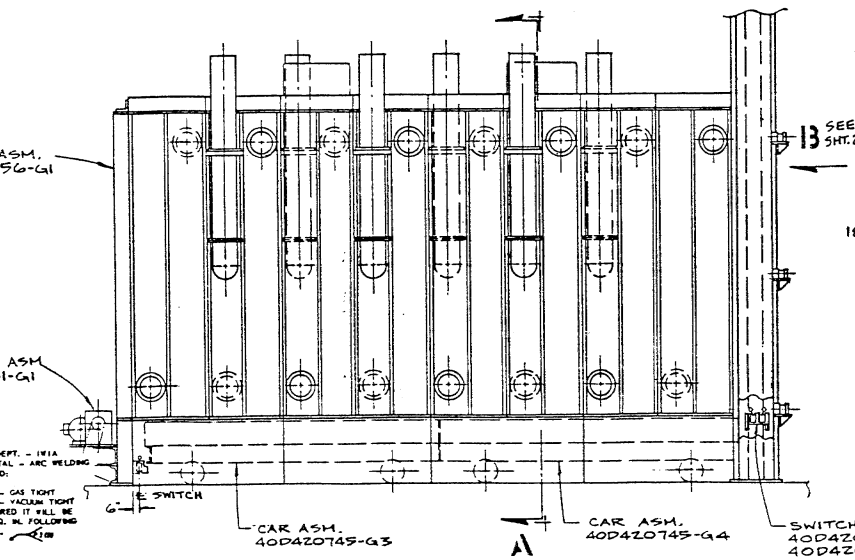

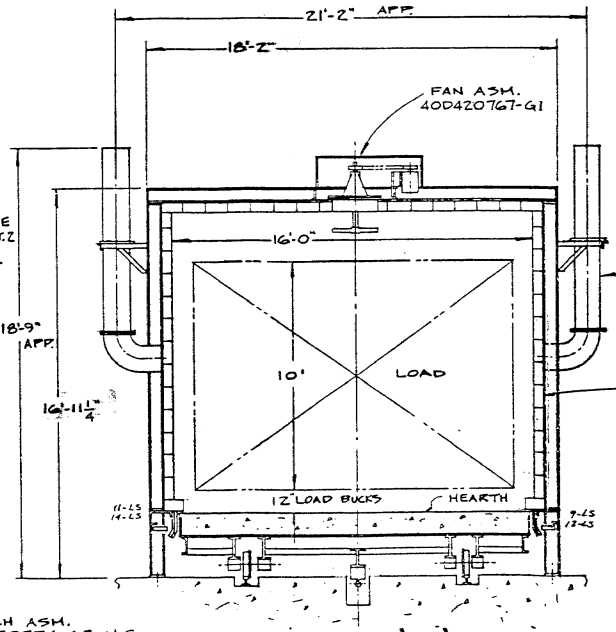

SECTION A-A

ASM'S. NOT SHOWN:
COMBUSTION ASM.
40D420760-G1
AIR PIPING ASM.
40D420763-G1

G. E. CO. - I. H. DEPT. - 1914
WELDS TO BE SHIELDED METAL - ARC WELDING
UNLESS OTHERWISE SPECIFIED:
WELDING KEY
P1 - AIR TIGHT P3 - GAS TIGHT
P2 - WATER TIGHT P4 - VACUUM TIGHT
IF PRESSURE TEST IS REQUIRED IT WILL BE DENOTED IN POUNDS PER SQ. IN. FOLLOWING WELDING KEY PART NUMBER.

REVISIONS | PRINTS TO

2 Park 4-10-78	FG	IND. HEATING R/SHELBYVILLE	40D420759 — 2 — 1
3 Jand 11-1-77			

CLI 2-57764R

GENERAL ELECTRIC

400420759

TITLE OUTLINE-CAR BOTTOM FURNACE- GAS FIRED

FIRST MADE FOR 40X607252-C1 S.O. F10

UNLESS OTHERWISE SPECIFIED USE THE FOLLOWING —

APPLIED PRACTICES	SURFACES	TOLERANCES ON MACHINED DIMENSIONS		
	✓	FRACTIONS	DECIMALS	ANGLES

400420759

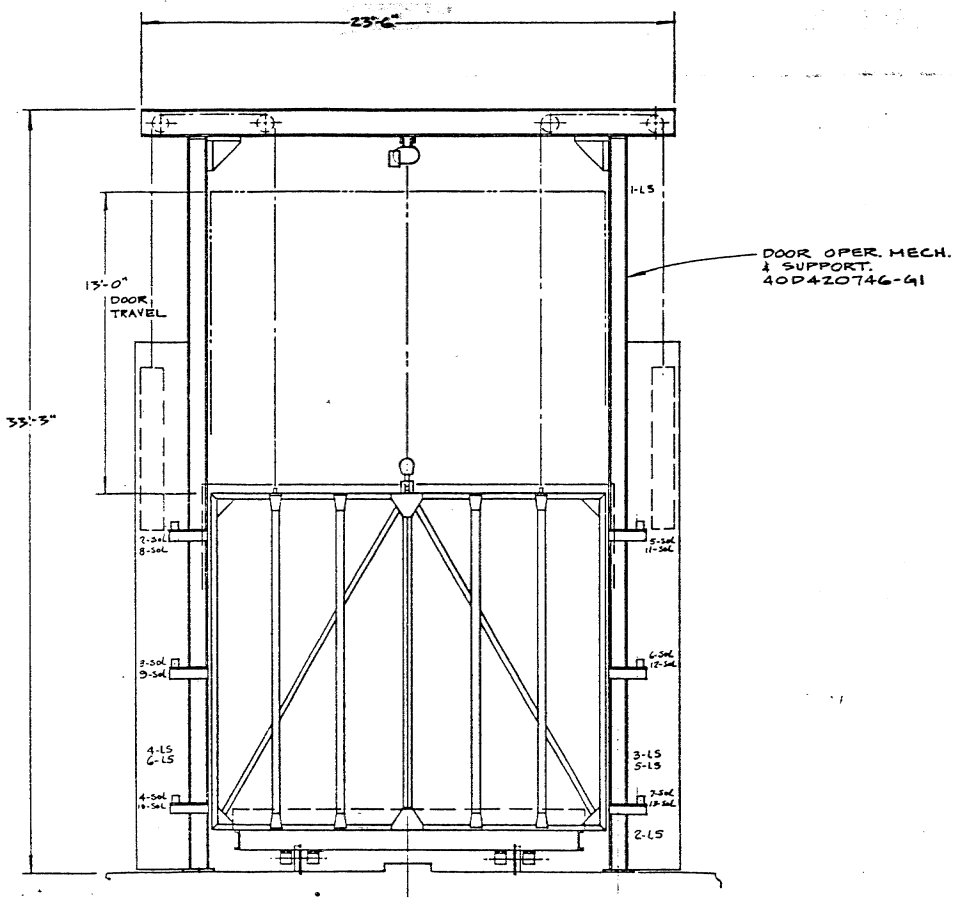

VIEW 13

G. E. CO. - L. H. DEPT. - 1918
ELDS TO BE SHIELDED METAL - ARC WELDING
NLESS OTHERWISE SPECIFIED:
WELDING KEY
1 - AIR TIGHT P3 - GAS TIGHT
2 - WATER TIGHT P4 - VACUUM TIGHT
PRESSURE TEST IS REQUIRED IT WILL BE
ENOTED IN POUNDS PER SQ. IN. FOLLOWING
ELDING KEY PART NUMBER.

REVISIONS

1	ADDED LIFT TUBES & CHANGED	

PRINTS TO

IND. HEATING DIV. OF GE
TO SHELBYVILLE LOCATION

400420759

REV. NO. SHEET 2